Time left 0:47:11

Question **1**

Not yet answered

Marked out of 2.00

Consider the first-order logic sentence F: $\forall x\ (\exists y.\ \text{like}(x,y))$. Which of the sentence(s) below is implied by F (multiple answers are possible)?

Select one or more:

- ☐ a. $\exists y(\forall x\text{: } like(x,y))$
- ☐ b. $\exists y(\exists x\text{: } like(x,y))$
- ☐ c. $\forall y(\exists x\text{: } like(x,y))$
- ● d. $\neg(\exists x(\forall y\text{: } \neg like(x,y)))$

Time left 0:54:26

Question **2**

Not yet answered

Marked out of 1.00

Which kind of knowledge representation is illustrated in the following graph?

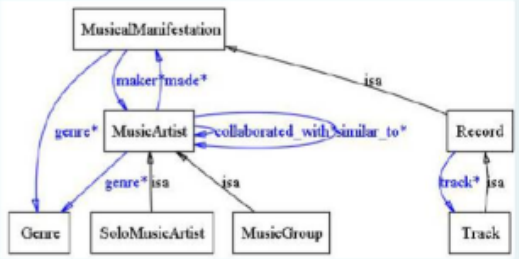

Select one:

- ○ a. A taxonomy
- ○ b. A thesaurus
- ● c. An ontology
- ○ d. A list

Time left 0:54:16

Question **3**

Not yet answered

Marked out of 1.00

What is the correct translation of the following statement into First-order logic? "Some days in the winter are sunny"?

Select one:

- ○ a. $\exists x\text{: } Day(x, winter) \vee Sunny(x)$
- ○ b. $\exists x\text{: } Sunny(x) \rightarrow Day(x, winter)$
- ● c. $\exists x\text{: } Day(x, winter) \wedge Sunny(x)$
- ○ d. $\exists x\text{: } Day(x, winter) \rightarrow Sunny(x)$

Previous page

Next page

Time left 0:54:09

Question **4**

Not yet answered

Marked out of 1.00

The next action of a simple reflex agent completely depends upon:

Select one:

- a. Its current percept
- b. The value of the utility function for each possible action
- c. Its internal state
- d. Its percept history

Previous page

Next page

Time left 0:53:59

Question **5**

Not yet answered

Marked out of 1.00

How many negative literals can appear in a clause of an expression in Horn normal form?

Select one:

- a. Minimum 1.
- b. Unconstrained.
- c. None.
- d. Maximum 1.

Previous page

Next page

Question **6**

Not yet answered

Marked out of 1.00

From the two assumptions $\{\forall x : (bird(x) \rightarrow flies(x)\ ;\ bird(Piupiu)\}$ and using the unification and Modus Ponens, one can infer ...

Select one:

- a. $bird(x)$ and $bird(Piupiu)$
- b. $bird(Piupiu)$
- c. $flies(Piupiu)$
- d. $flies(x)$

Previous page

Next page

Time left 0:53:43

Question **7**

Not yet answered

Marked out of 1.00

The least-constraining-value heuristic prefers ...

Select one:

- a. the variable with the fewest remaining legal values to assign next.
- b. the value that rules out the fewest choices for the neighboring variables in the constraint graph.
- c. the variable with the smallest value.
- d. the smallest value to assign to every variable.

Previous page

Next page

Question **8**

Not yet answered

Marked out of 1.00

Agents behavior can be best described by:

Select one:

- a. Percept sequence
- b. Environment in which the agent is performing
- c. Agent function
- d. Sensors and Actuators

Previous page

Next page

Time left 0:53:30

Question **9**

Not yet answered

Marked out of 1.00

If we want to prove clause α given a Knowledge Base KB using Robinson's Resolution algorithm, and there is no new clause being generated and no contradiction, then:

Select one:

- a. we cannot make any conclusion about the clause α given KB
- b. clause α is not entailed by KB
- c. clause α is entailed by KB

Previous page

Next page

Question **10**

Not yet answered

Marked out of 1.00

In the Alpha-Beta pruning algorithm, where do the values of Alpha and Beta get updated?

Select one:

- a. At the initial state
- b. At any node which evaluated value is greater than Beta and smaller than Alpha
- c. When reaching the leaves
- d. Along the path of search

Previous page

Next page

Time left 0:53:16

Question **11**

Not yet answered

Marked out of 1.00

Consider the following tree with the values are determined when running Minimax algorithm.

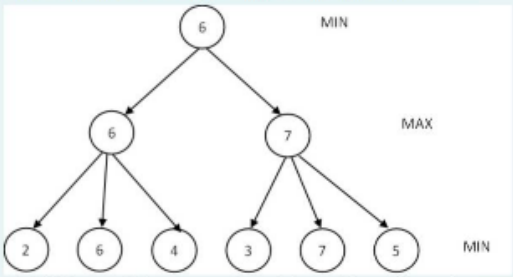

Determine the node in the third level which is pruned first when running Minimax with $\alpha - \beta$ prunning:

Select one:

- a. Node 3
- b. Node 2
- c. Node 4
- d. Node 5

Time left 0:53

Question **12**

Not yet answered

Marked out of 1.00

Forward chaining is a ... reasoning mechanism, while backward chaining is a ... reasoning mechanism.

Select one:

- a. goal-driven, goal-driven
- b. data-driven, data-driven
- c. goal-driven, data-driven
- d. data-driven, goal-driven

Previous page

Next pa

Time left 0:32:58

Question **13**

Not yet answered

Marked out of 1.00

When we say that a search algorithm is optimal, it means that its time complexity is minimal.

Select one:

- a. False
- b. True

Previous page

Next page

Time lef

Question **14**
Not yet answered
Marked out of 2.00

Which of the following entailments are correct (multiple answers are possible)?

Select one or more:

- ☐ a. $A \vee B \models A$
- ● b. $(A \vee B) \rightarrow C \models (A \rightarrow C) \wedge (B \rightarrow C)$
- ☐ c. $(A \vee B) \wedge (\neg C \vee \neg D \vee E) \models (A \vee B) \wedge (\neg C \vee E)$
- ● d. $A \wedge B \models A \leftrightarrow B$

Previous page

Ne

Time left 0:52:45

Question **15**
Not yet answered
Marked out of 1.00

Which search algorithm always expands the node that is closest to the goal?

Select one:

- ● a. Greedy best-first search
- ○ b. Depth-first search
- ○ c. A* search
- ○ d. Best-first search

Previous page

Next page

Time left 0:52:38

Question **16**
Not yet answered
Marked out of 1.00

Which one of the following statements is true for a local search method?

Select one:

- ○ a. The path from the initial state to the goal must be included in the solution
- ○ b. The cost of the path from the initial state to the goal must be minimized
- ○ c. All possible paths from the initial state to the goal are considered
- ● d. The path from the initial state to the goal does not matter (i.e., not necessarily included in the solution)

Previous page

Next page

Time left 0:52:

Question **17**
Not yet answered
Marked out of 2.00

Let's consider the sentence $\exists x : Car(x) \wedge Flat(RightTyre(x))$. Which of the following statement(s) are true (multiple answers are correct):

Select one or more:

- ☐ a. x is a variable
- ☐ b. Car is a function symbol with arity 1
- ☐ c. x is a constant
- ● d. $Car(x)$ is a term
- ● e. $Car(x)$ is a predicate
- ● f. Car is a relation symbol with arity 1

Previous page

Next pag

Question **18**

Not yet answered

Marked out of 1.00

Choose the most appropriate statement about *overfitting* in supervised classification:

Select one:

- a. All other possible answers are wrong
- b. A function is said to overfit (compared to another one) if it is more accurate in fitting known data, but less accurate in predicting unseen data
- c. A function is said to overfit (compared to another one) if it is less accurate in fitting known data, but more accurate in predicting unseen data
- d. A function is said to overfit (compared to another one) if it is less accurate in both fitting known data and predicting unseen data

Previous page

Next page

Question **19**

Not yet answered

Marked out of 1.00

Does Minimax with Alpha-Beta pruning algorithm need to reach a terminal state to find a solution?

Select one:

- a. No
- b. Yes

Previous page

Next page

Question **20**

Not yet answered

Marked out of 1.00

Given $\forall x : \neg P(x) \wedge Q(x,y) \rightarrow R(x)$. Which of the following is the result after conversion to to Conjunctive Normal Form (CNF), where ";" separates the different clauses in the CNF?

Select one:

- a. $\neg P(x)$; $(\neg Q(x,y) \vee R(x))$
- b. $\neg P(x) \vee Q(x,y) \vee R(x)$
- c. $P(x) \vee \neg Q(x,y) \vee R(x)$
- d. $P(x)$; $(\neg Q(x,y) \vee R(x))$

Previous page

Next page

Question **21**

Not yet answered

Marked out of 1.00

Australian states are represented on the graph, with the all neighbouring states connected. The problem is to color the map so that, each state is colored one of three colors (red, green, blue), with the constraint that two states sharing a border are colored with two different colors.

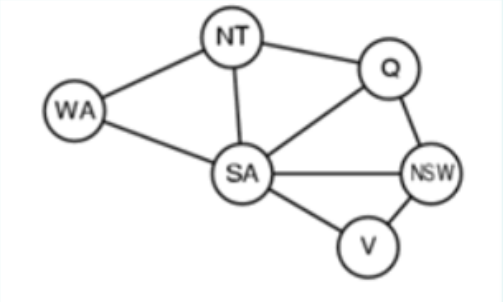

To solve this problem, we use backtracking search with forward checking but without MRV or LCV. The order in which the variables are considered for coloring, is as follows: WA, NT, SA, Q, NSW, V. What is the number of turns (one color assigned for one state counts as one turn) to reach a valid solution?

Select one:

- a. 6
- b. 9
- c. 12
- d. 7

Question **22**

Not yet answered

Marked out of 1.00

Which one of the following is an equivalent form of $P \leftrightarrow Q$

Select one:

- a. $(P \vee Q) \rightarrow (P \wedge Q)$
- b. $(P \wedge Q) \rightarrow (P \vee Q)$
- c. $(P \vee Q) \wedge (P \wedge Q)$
- d. $(P \rightarrow Q) \wedge Q$

Previous page

Next page

Question **23**

Not yet answered

Marked out of 2.00

Which of the following disciplines did **NOT** contribute to the foundations of AI (multiple answers are possible).?

Select one or more:

- a. Biology
- b. Mathematics
- c. Computer Engineering
- d. Pedagogy
- e. Psychology

Previous page

Next page

Time left

Question **24**

Not yet answered

Marked out of 1.00

The main goal when conceiving an expert system is to enable the machine to:

Select one:

- a. Act like humans
- b. Think like humans
- c. Think rationally
- d. Act rationally

Previous page

Next

Question **25**

Not yet answered

Marked out of 1.00

The following assertion: $(P \wedge Q) \wedge \neg R \rightarrow \neg Q$ is:

Select one:

- a. satisfiable
- b. valid
- c. unsatisfiable

Previous page

Time left 0:51:21

Question **26**

Not yet answered

Marked out of 1.00

In the figure, the value written on an arc (e.g., 2) represents the cost of moving between 2 nodes connected by that arc, and the value in each node written in brackets (e.g., [5]) represents the estimated cost of moving from that node to a goal node (value of the heuristic function used by A*). The name of the node is a letter in the node's lower right-hand corner. Assume that the data structure implementations and successor state orderings are based on alphabetical order. What is the order in which nodes are examined by the A* search algorithm?

Select one:

- a. A, D, C, B, H
- b. A, C, B, D, H
- c. A, C, D, B, H
- d. A, B, C, D, H

Time left 0:51:

Question **27**
Not yet answered
Marked out of 1.00

Which of the following is **not** one of the main components of Fuzzy Logic Systems?

Select one:
- a. De-fuzzification module
- b. Fuzzy linguistic variables
- c. Fuzzy inference engine
- d. Fuzzification module

Previous page | Next pag

Question **28**
Not yet answered
Marked out of 1.00

Which environment is called "semi-dynamic"?

Select one:
- a. Both the environment and the agent's performance changes with the passage of time
- b. Environment does not change with the passage of time
- c. Environment does not change with the passage of time, but the agent's performance changes
- d. Environment constantly changes with the passage of time

Previous page | Next page

Time left 0:50:54

Question **29**
Not yet answered
Marked out of 2.00

Which search algorithms use the problem-specific knowledge beyond the definition of the problem (multiple answers are possible)?

Select one or more:
- a. Depth-first search
- b. Minimax
- c. Alpha-beta pruning
- d. Greedy best-first search

Previous page | Next page

Time left 0:50:47

Question **30**
Not yet answered
Marked out of 1.00

What kind of environment does crossword puzzle have?

Select one:
- a. Continuous
- b. Static
- c. Semi Dynamic
- d. Dynamic

Previous page | Next page

Question **31**

Not yet answered

Marked out of 1.00

Which one of the following statements is correct:

Select one:

- a. Supervised learning is a process of learning that need a human supervisor to guide learning.
- b. Supervised learning is an algorithm that helps a computer to learn from data.
- c. Supervised learning is some kind of meta-learning using different learning algorithms and merging their outputs.
- d. Supervised learning is a learning problem in which each data instance has at least one label in the training set.

Previous page

Next page

Question **32**

Not yet answered

Marked out of 1.00

The main goal of Turing test is to check if the machine is able to:

Select one:

- a. Think rationally
- b. Think like humans
- c. Act rationally
- d. Act like humans

Previous page

Next page

Time left 0:50:28

Question **33**

Not yet answered

Marked out of 1.00

What is the main difference between the two terms "optimal" and "optimally efficient"?

Select one:

- a. An algorithm is optimally efficient if it is guaranteed to keep a minimum number of nodes in memory (RAM), whereas an algorithm is optimal if it is guaranteed to find the least-cost path to the goal (if such path exists)
- b. An algorithm is optimally efficient if it is guaranteed to find the least-cost path to the goal (if such path exists), whereas an algorithm is optimal if it is guaranteed to keep a minimum number of nodes in memory (RAM)
- c. There is no difference between these two terms: they refer to the same property of some search algorithms
- d. Optimal refers to the cost of the final solution returned by the algorithm, whereas optimally efficient refers to the set of nodes expanded

Previous page

Next page

Time left 0:50:13

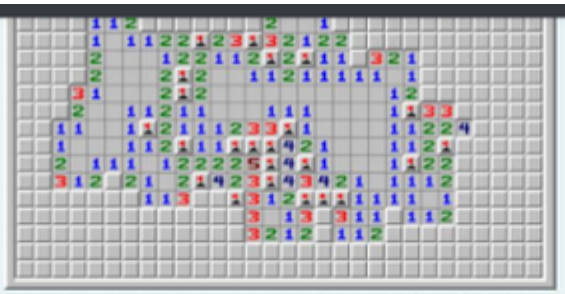

Minesweeper is a 1-player game. The goal is to expose all the open areas on the board without hitting any bomb, as quick as possible:

- If you hit a bomb, you lose
- your score is inversely proportional to the time you took to finish the game

The numbers inside the squares represent how many bombs are adjacent to a square. For example, if a square has a "3" on it, then there are 3 bombs next to that square.
You can place a flag where you think a bomb is. This allows you to avoid that spot. Otherwise, if you choose to expose a square but it contains a bomb, then you lose.
The number on the top right hand side of the screen (here 040) represents the number of bombs which are still non-exploded on the board.
The number on the top left hand side of the screen (here 076) represents the number of seconds that you've played so far.

This environment is:

Select one:

- a. Dynamic
- b. Static
- c. Semi-dynamic

Question **35**
Not yet answered
Marked out of 1.00

For many real-life problems, depth-first search has less **time complexity** than breadth-first search:

Select one:

- a. False: breadth-first search has exactly the same time complexity than depth-first search
- b. True
- c. False: breadth-first search has less time complexity than depth-first search

Previous page

Time left 0:49:58

Question **36**
Not yet answered
Marked out of 1.00

The following assertion: $P \wedge Q$ is:

Select one:

- a. unsatisfiable
- b. valid
- c. not valid

Previous page

Next page

Time left 0:49:5

Question **37**
Not yet answered
Marked out of 1.00

A model-based reflex agent usually:

Select one:

- a. maintains some kind of structure that describes a part of the world which it cannot sense currently
- b. build its own model of the whole world
- c. learn some new information from its environment
- d. contains a model of how to react to any set of signals from its environment

Previous page

Next page

Time left 0:49:43

Question **38**
Not yet answered
Marked out of 2.00

Indicate which of the following pairs of sentences in FOL and english are equivalent (multiple answers are possible):

Select one or more:

- a. $\forall x \exists y : Person(x) \rightarrow [Food(x) \wedge Likes(x, y)]$ for "For every person, there is a food that this person likes."
- b. $\forall y \exists x : Food(y) \rightarrow [Person(x) \wedge Likes(x, y)]$ for "For every food, there is a person who likes that food."
- c. $\forall x \exists y : Person(x) \rightarrow [Food(y) \wedge Likes(x, y)]$ for "For every person, there is a food that this person likes."
- d. $\forall y \forall x : Food(y) \rightarrow [Person(x) \vee Likes(x, y)]$ for "For every food, there is a person who likes that food."

Previous page

Next page

Question **39**
Not yet answered
Marked out of 2.00

When the cost of each step (exploring from a node to its child) is the same, **Iterative Deepening Search** is in general (multiple choices are allowed):

Select one or more:

- a. Optimal
- b. Optimally efficient
- c. Much much more time complex than depth-first search
- d. Complete

Previous page

Next page

Time left 0:49:29

Question **40**
Not yet answered
Marked out of 1.00

Convert the logical sentence: $B \leftrightarrow (P \rightarrow Q)$ to Conjunctive Normal Form (CNF), where ";" separates the different clauses in the CNF Which of the following is TRUE?

Select one:

- a. $B \vee \neg P \vee Q\,;\ P \vee B\,;\ \neg Q \vee B \vee \neg P$
- b. $B \vee \neg P \vee Q\,;\ P \vee B\,;\ \neg Q \vee B$
- c. $\neg B \vee \neg P \vee Q\,;\ P \vee B\,;\ \neg Q \vee B$

Previous page

Next page

The problem is to fill in the cells of the square with the numbers 1 to 9 so that the sum of each row, column and diagonal is 15. During the filling process, the next cell to fill can be a corner cell (a), a cell in the edge (b) or the cell in the center of the square (c).

Time left 0:49:21

a	b	a
b	c	b
a	b	a

Which of the two locations (first cell and second cell) should be assigned from beginning to improve the efficiency of the backtracking method:
Your answer:

Select one:

- a. c-a
- b. c-b
- c. b-b
- d. a-a

Question **42**

Not yet answered

Marked out of 1.00

In backtracking search, which one of the following statements is true?

Select one:

- a. Degree heuristic is often used as a tie-breaker for Minimum Remaining Values, for choosing the next variable to assign
- b. Degree heuristic and Least Constraining Values are two heuristics that can be used for detecting inevitable failure early
- c. Degree heuristic is often used as a tie-breaker for Least Constraining Values, for ordering the values to examine (after the variable to assign has been chosen)
- d. Degree heuristic and Minimum Remaining Values are two heuristics that can be used for ordering the values to examine (after the variable to assign has been chosen)

Previous page

Next page

Question **43**

Not yet answered

Marked out of 1.00

Translate the given statement into First-order logic: "All poets are writers" :

Select one:

- a. $\forall x: Poet(x) \rightarrow Writer(x)$
- b. $\forall x: \neg Writer(x) \vee Poet(x)$
- c. $\exists x: Poet(x) \rightarrow Writer(x)$
- d. $\forall x: Poet(x) \wedge Writer(x)$

Question **44**

Not yet answered

Marked out of 1.00

Let us consider the following extract of a search tree, where only the states in nodes G1 and G2 verify the goal test. The values shown on the edges are the cost of transitioning from one state to another (used by some algorithms but not all, as you know):

Time left 0:48:54

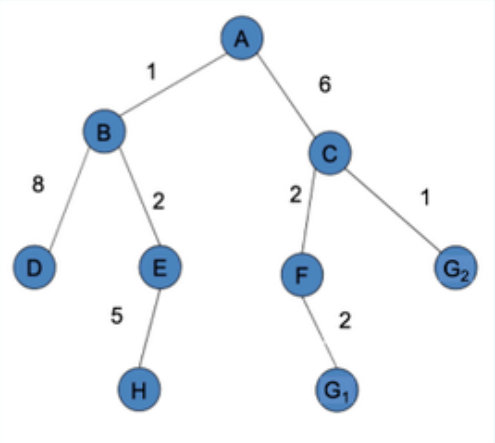

Give the ordered list of expanded nodes until reaching a Goal node (G1 or G2), when using **Iterative-Deepening search**.

Select one:

- a. A, A, B, D, E, C, F, G2
- b. A, A, B, C, A, B, C, D, E, F, G2
- c. A, A, B, C, A, B, D, E, C, F, G2
- d. A, A, C, A, C, G2

Time left 0:48:46

Question **45**

Not yet answered

Marked out of 1.00

What is the correct translation of the following statement into First-order logic? "All students study at least one branch":

Select one:

- a. $\forall x$: $Student(x) \rightarrow (\forall y$: $Branch(y) \wedge StudyBranch(x,y))$
- b. $\forall x \exists y$: $Student(x) \wedge Branch(y) \rightarrow StudyBranch(x,y)$
- c. $\forall x$: $Student(x) \rightarrow (\exists y$: $Branch(y) \wedge StudyBranch(x,y))$
- d. $\forall x \forall y$: $Student(x) \wedge Branch(y) \rightarrow StudyBranch(x,y)$

Previous page

Next page

Time left 0:48:36

Question **46**

Not yet answered

Marked out of 1.00

In a Fuzzy Logic System, generally, the output of the fuzzy inference engine is a fuzzy number which further needs to be de-fuzzified.

Select one:

- a. False
- b. True

Previous page

Next page

Question **47**

Not yet answered

Marked out of 1.00

What is the type of variable for the size of a T-shirt (S, M, L, XL):

Select one:

- a. Categorical, nominal
- b. Numeric, discrete
- c. Categorical, ordinal
- d. Numeric, continuous

Previous page

Question **48**

Not yet answered

Marked out of 1.00

What is the logical translation of the following statement: "No one is perfect" ?

Select one:

- a. $\exists x: \neg Person(x) \wedge \neg Perfect(x)$
- b. $\neg\exists x: Person(x) \wedge Perfect(x)$
- c. $\exists x: Person(x) \wedge \neg Perfect(x)$
- d. $\exists x: \neg Person(x) \wedge Perfect(x)$

Previous page

Time left 0:48:08

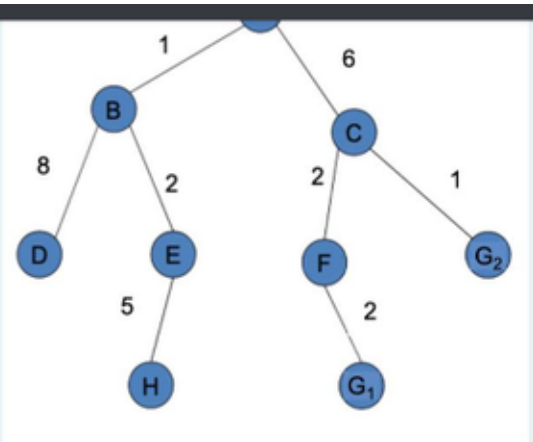

Give the ordered list of expanded nodes until reaching a Goal node (G1 or G2), when using **depth-limited search** with depth limit l=2 (where depth=0 for the root).

Select one:

- a. A, B, E, C, G2
- b. A, B, D, E, H, C, F, G1
- c. A, B, D, E, C, F, G2
- d. A, B, C, D, E, F, G2
- e. A, B, D, E, H, C, F, G1, G2

Question **50**

Not yet answered

Marked out of 1.00

Any search algorithm that is complete and optimal must examine all possible paths to a goal state.

Select one:

- a. True
- b. False

Previous page

Question **51**

Not yet answered

Marked out of 1.00

Which of the following components of a knowledge representation is used for constructing legal sentences in logic?

Select one:

- a. Knowledge base
- b. Semantics
- c. Inference engine
- d. Syntax

Previous page

Next

Question **52**

Not yet answered

Marked out of 1.00

Which of the following is **not** a possible framework for uncertain knowledge and reasoning in AI?

Select one:

- a. Dempster-Shafer theory
- b. Possibility theory
- c. General relativity theory
- d. Probabilistic Decision Theory

Previous page

Question **53**

Not yet answered

Marked out of 1.00

Why are most standard search algorithms (breadth-first search, uniform cost search, etc) not adapted to Constraint Satisfaction problems?

Select one:

- a. Because they are not complete when applied to Constraint Satisfaction problems
- b. Because they are too much time-consuming when applied to Constraint Satisfaction problems
- c. Because, by nature, there is no way to apply them to Constraint Satisfaction problems
- d. Because they are not optimal when applied to Constraint Satisfaction problems

Previous page

Next page

Question **54**

Not yet answered

Marked out of 1.00

Which one of the following disciplines is **NOT** a research area of AI?

Select one:

- a. Natural Language Processing
- b. Knowledge Representation
- c. Automated Reasoning
- d. Databases

Previous page

Finish atte